HAVE QUESTIONS? Call us toll free!
800-454-1801

Sedona Double Recliner Loveseat

Measurements & Seat Dimensions

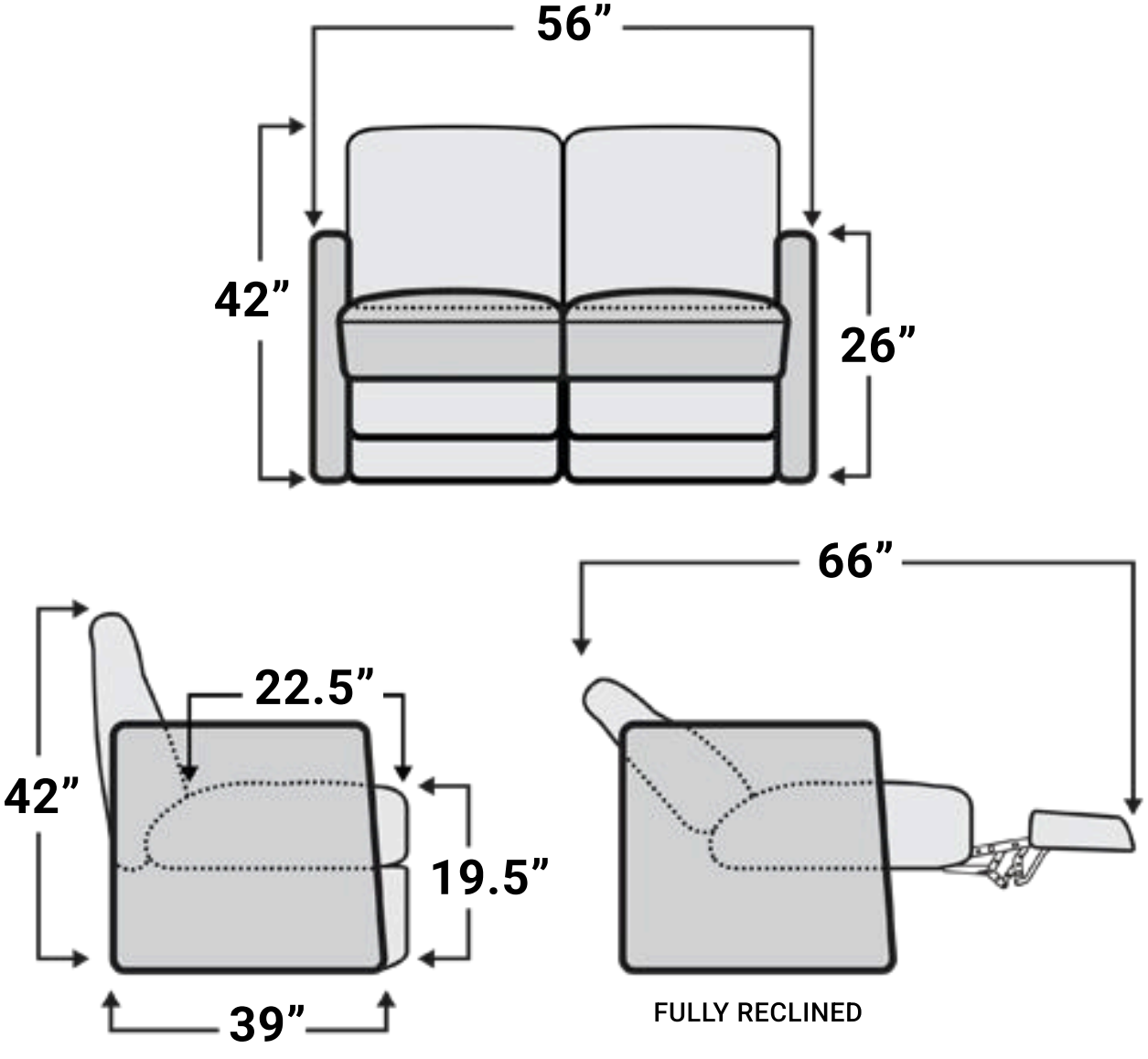

Minimum Distance Required from Wall: **1”**

Revised on **March 2, 2026**